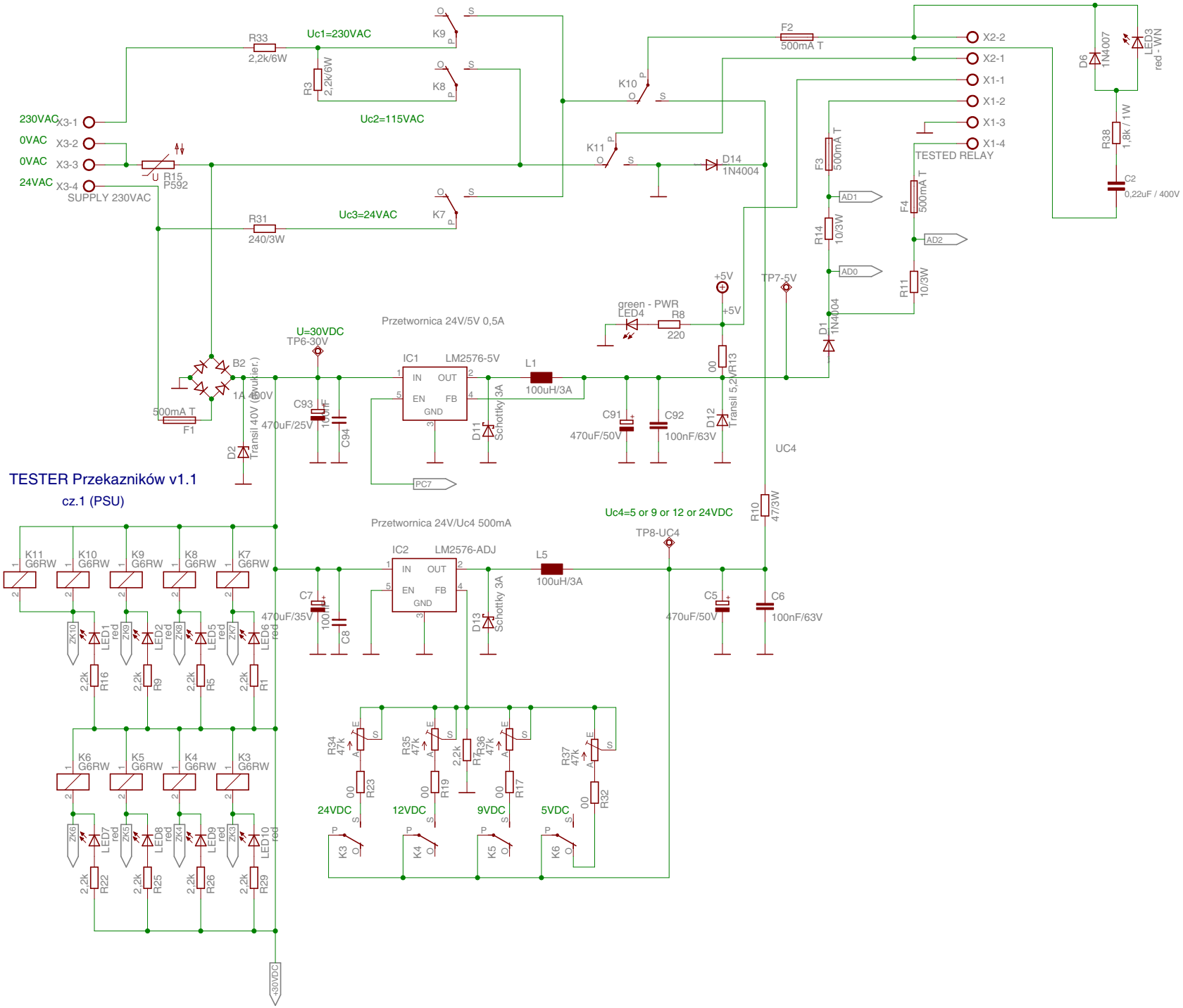
TESTER Przekazników v1.1
cz.1 (PSU)
230VAC X3-1
0VAC X3-2
0VAC X3-3
24VAC X3-4
SUPPLY 230VAC
R15 P592
R33 2,2k/6W
R3 2,2k/6W
Uc1=230VAC
Uc2=115VAC
Uc3=24VAC
R31 240/3W
K9
K8
K7
K10
K11
D14 1N4004
F2 500mA T
X2-2
X2-1
X1-1
X1-2
X1-3
X1-4
TESTED RELAY
D6 1N4007
LED3 red - WN
R38 1,8k / 1W
C2 0,22uF / 400V
F3 500mA T
F4 500mA T
R14 10/3W
R11 10/3W
D1 1N4004
AD1
AD2
AD0
+5V
TP7-5V
green - PWR LED4
R8 220
R13 00
D12 Transil 5,2V
C91 470uF/50V
C92 100nF/63V
UC4
R10 47/3W
B2
1A 400V
F1 500mA T
D2 Transil 40V (wykier.)
U=30VDC
TP6-30V
C93 470uF/25V
C94 100nF
Przetwornica 24V/5V 0,5A
IC1 LM2576-5V
IN OUT EN FB GND
L1 100uH/3A
D11 Schottky 3A
PC7
Przetwornica 24V/Uc4 500mA
IC2 LM2576-ADJ
L5 100uH/3A
D13 Schottky 3A
C7 470uF/35V
C8 100nF
Uc4=5 or 9 or 12 or 24VDC
TP8-UC4
C5 470uF/50V
C6 100nF/63V
K11 G6RW
K10 G6RW
K9 G6RW
K8 G6RW
K7 G6RW
K6 G6RW
K5 G6RW
K4 G6RW
K3 G6RW
LED1 red
LED2 red
LED5 red
LED6 red
LED7 red
LED8 red
LED9 red
LED10 red
R16 2,2k
R9 2,2k
R5 2,2k
R1 2,2k
R22 2,2k
R25 2,2k
R26 2,2k
R29 2,2k
R34 47k
R35 47k
R36 47k
R37 47k
R23 00
R19 00
R17 00
R32 00
24VDC
12VDC
9VDC
5VDC
+30VDC

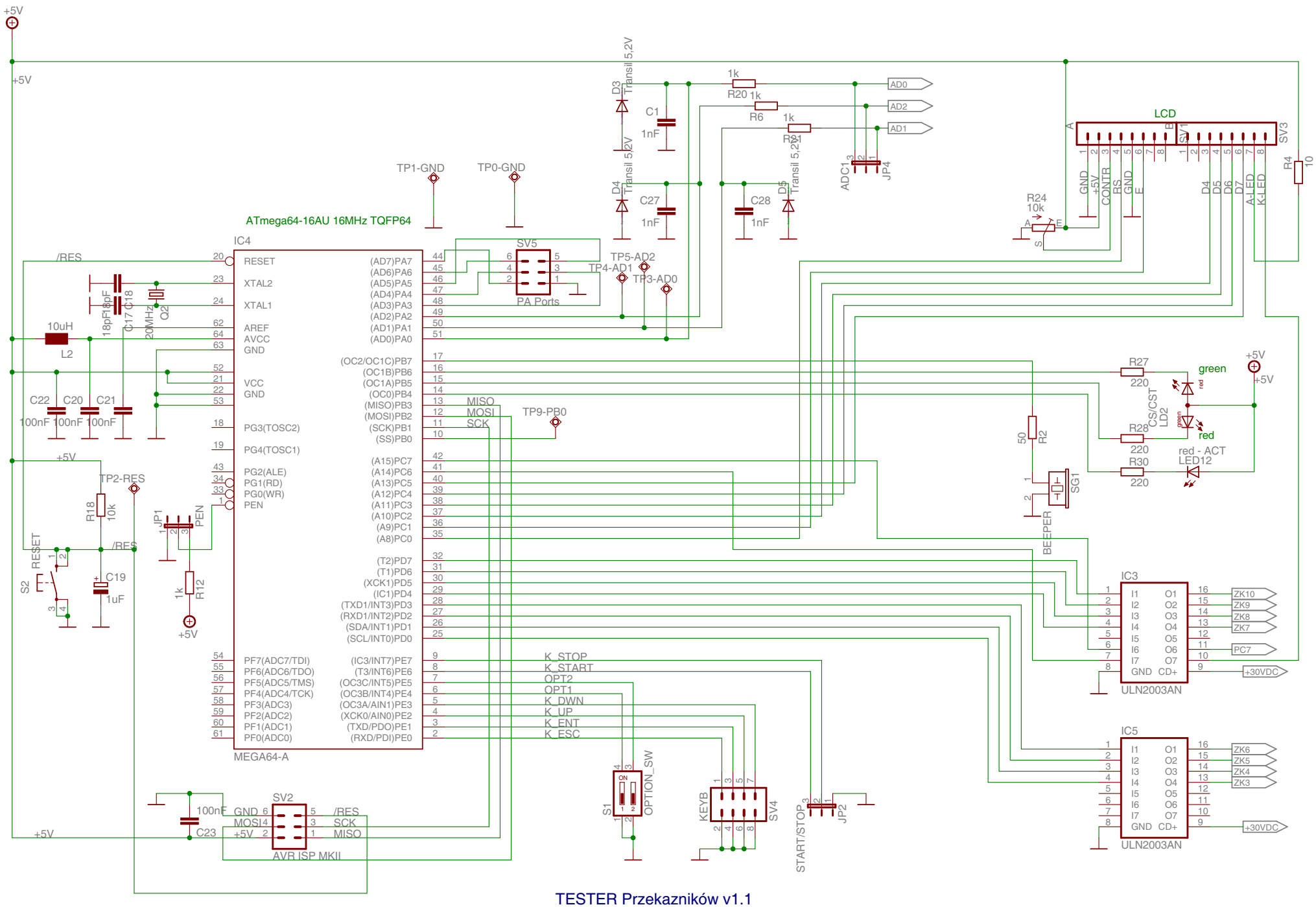

TESTER Przekazników v1.1

cz.2 (CPU)