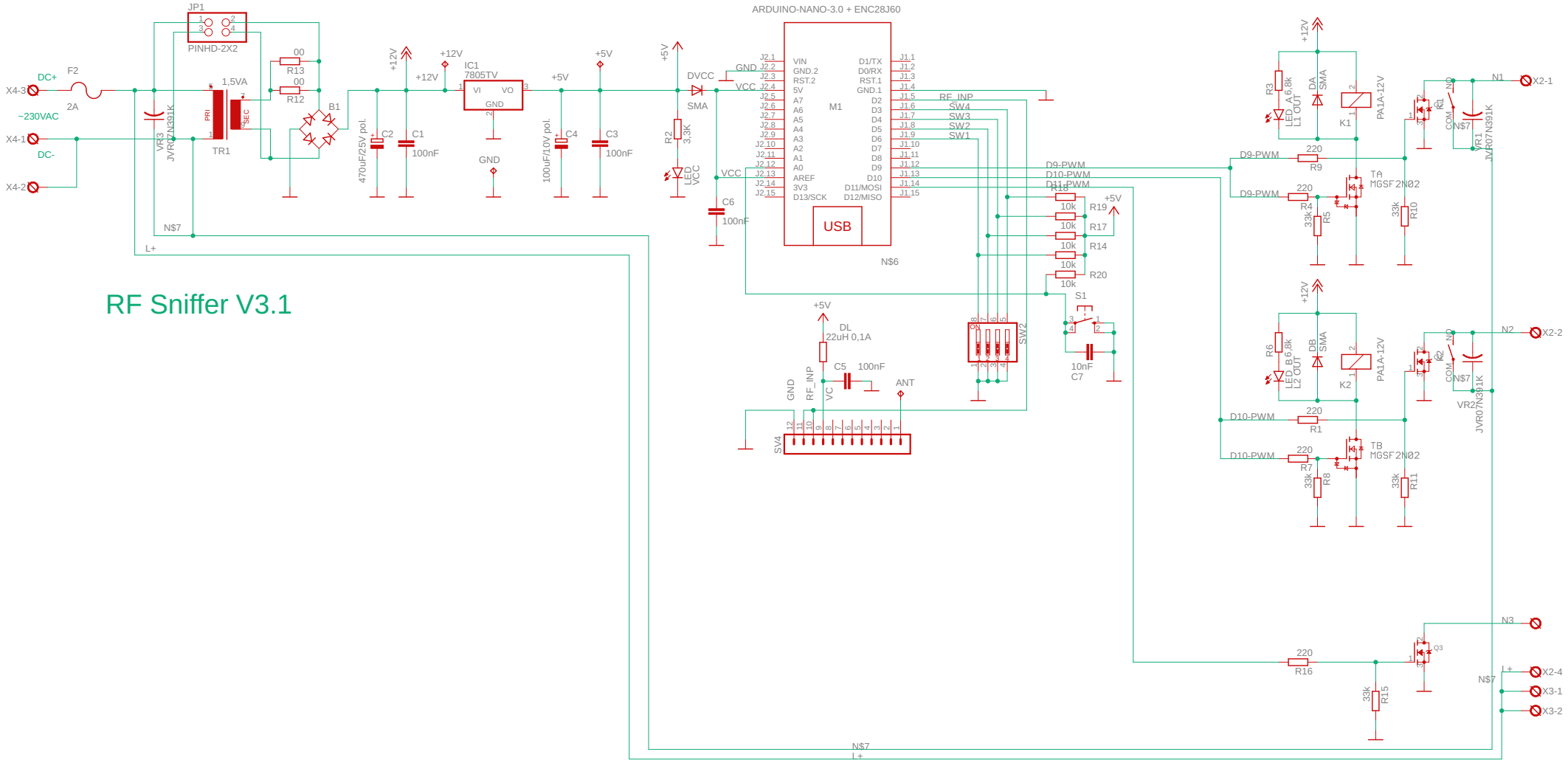
RF Sniffer V3.1
ARDUINO-NANO-3.0 + ENC28J60
USB
M1
N$6
JP1
PINHD-2X2
DC+
DC-
~230VAC
X4-3
X4-1
X4-2
F2
2A
1,5VA
TR1
PRI
SEC
VR3
JVR07N391K
B1
R13
R12
00
00
470uF/25V pol.
C2
C1
100nF
+12V
IC1
7805TV
VI
VO
GND
100uF/10V pol.
C4
C3
100nF
+5V
DVCC
SMA
R2
3,3K
LED
VCC
C6
100nF
N$7
L+
RF_INP
SW4
SW3
SW2
SW1
D9-PWM
D10-PWM
D11-PWM
R18
R19
R17
R14
R20
10k
S1
10nF
C7
SW2
DL
22uH 0,1A
C5
100nF
ANT
SV4
R3
R6
LED A 6,8k
LED B 6,8k
L1 OUT
L2 OUT
DA
DB
K1
K2
PA1A-12V
R9
R4
R5
R10
R1
R7
R8
R11
TA
TB
MGSF2N02
R16
R15
Q3
N1
N2
N3
X2-1
X2-2
X2-4
X3-1
X3-2
VR1
VR2
JVR07N391K